MB15B DATA SHEET

PRODUCT CODE: MB15B
MALLEABLE CONDUIT BOX

DESCRIPTION

20mm Malleable Through H Conduit Box

FINISH

Black Enamel

MATERIAL

Malleable Iron

PACKAGING

Packed in qty 10

ADDITIONAL NOTES

Conforms to BS EN61386-1:2008
Compliant to LU Standard 1-085 (for use on surface & sub-surface locations)

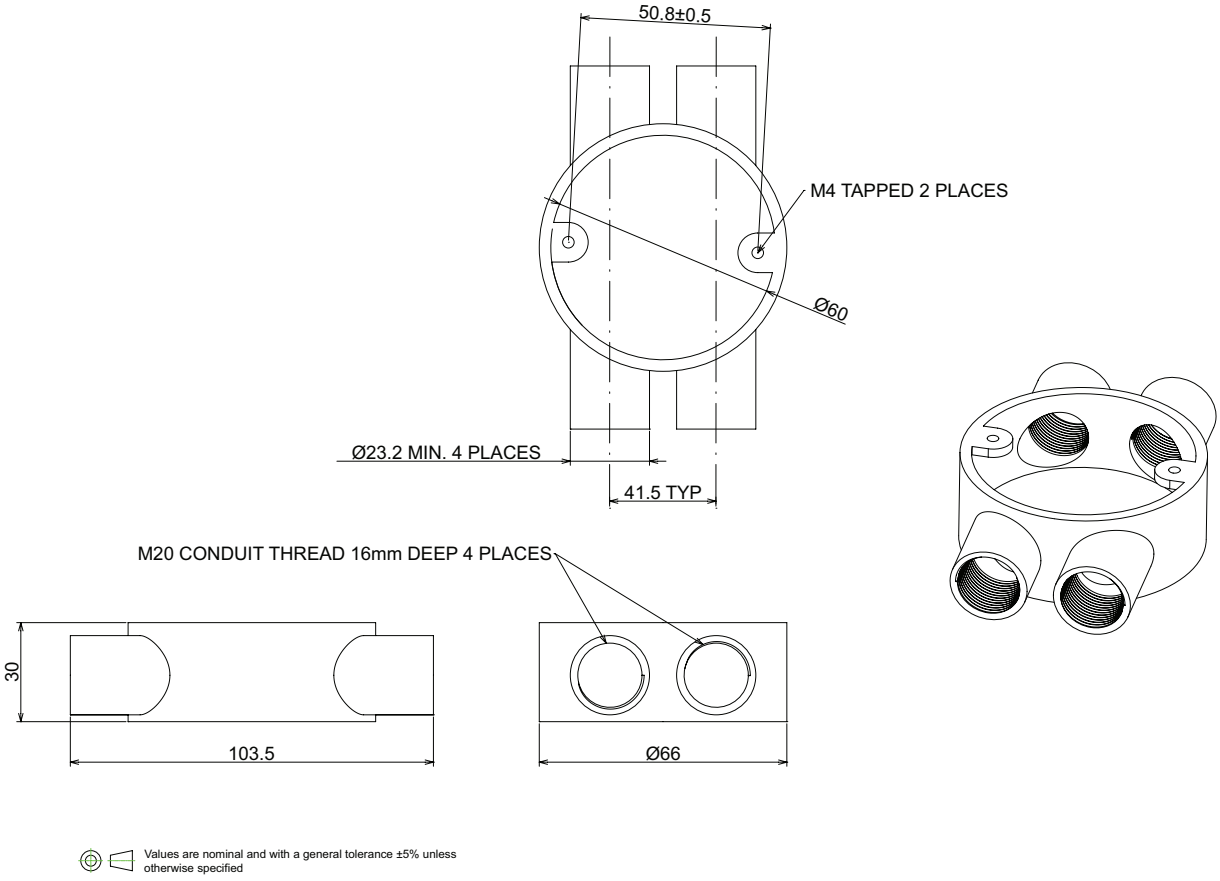

Values are nominal and with a general tolerance ±5% unless otherwise specified

© Metpro Ltd 2018 - This document is provided for information purposes only and is subject to change without notice. Metpro Ltd makes no warranty, express or implied, with this document or the information contained within.

MB15G DATA SHEET

PRODUCT CODE: MB15G
MALLEABLE CONDUIT BOX

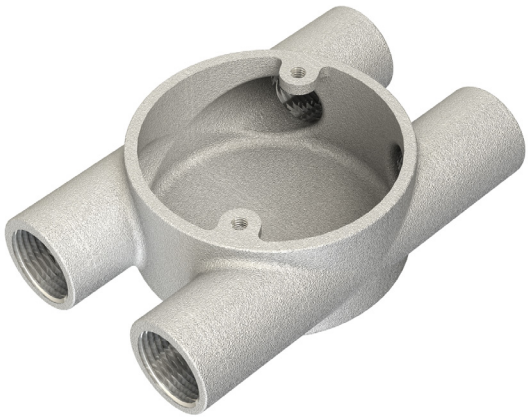

DESCRIPTION

20mm Malleable Through H Conduit Box

FINISH

Hot Dipped Galvanised

MATERIAL

Malleable Iron

PACKAGING

Packed in qty 10

ADDITIONAL NOTES

Conforms to BS EN61386-1:2008
Compliant to LU Standard 1-085 (for use on surface & sub-surface locations)

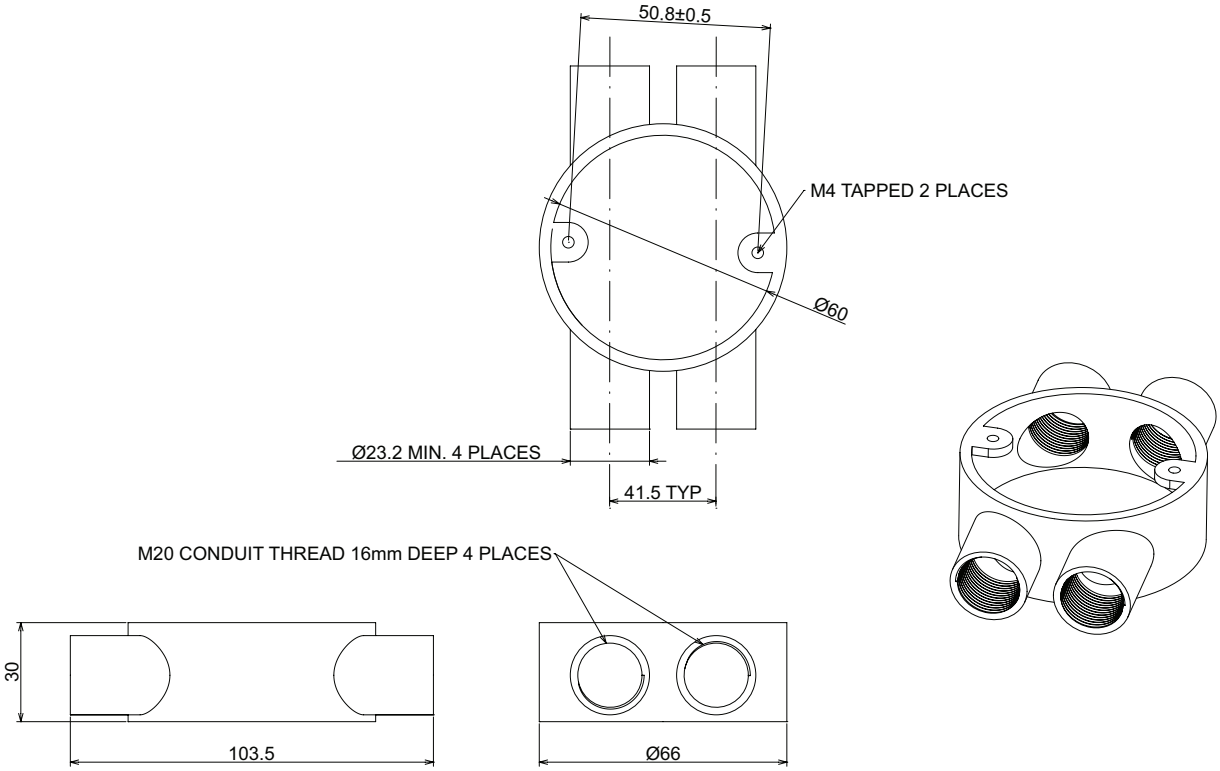

Values are nominal and with a general tolerance ±5% unless otherwise specified

© Metpro Ltd 2018 - This document is provided for information purposes only and is subject to change without notice. Metpro Ltd makes no warranty, express or implied, with this document or the information contained within.

MB16G DATA SHEET

PRODUCT CODE: MB16G
MALLEABLE CONDUIT BOX

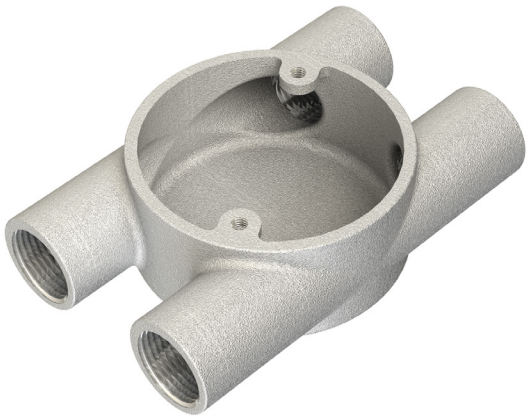

DESCRIPTION

25mm Malleable Through H Conduit Box

FINISH

Hot Dipped Galvanised

MATERIAL

Malleable Iron

PACKAGING

Packed in qty 10

ADDITIONAL NOTES

Conforms to BS EN61386-1:2008
Compliant to LU Standard 1-085 (for use on surface & sub-surface locations)

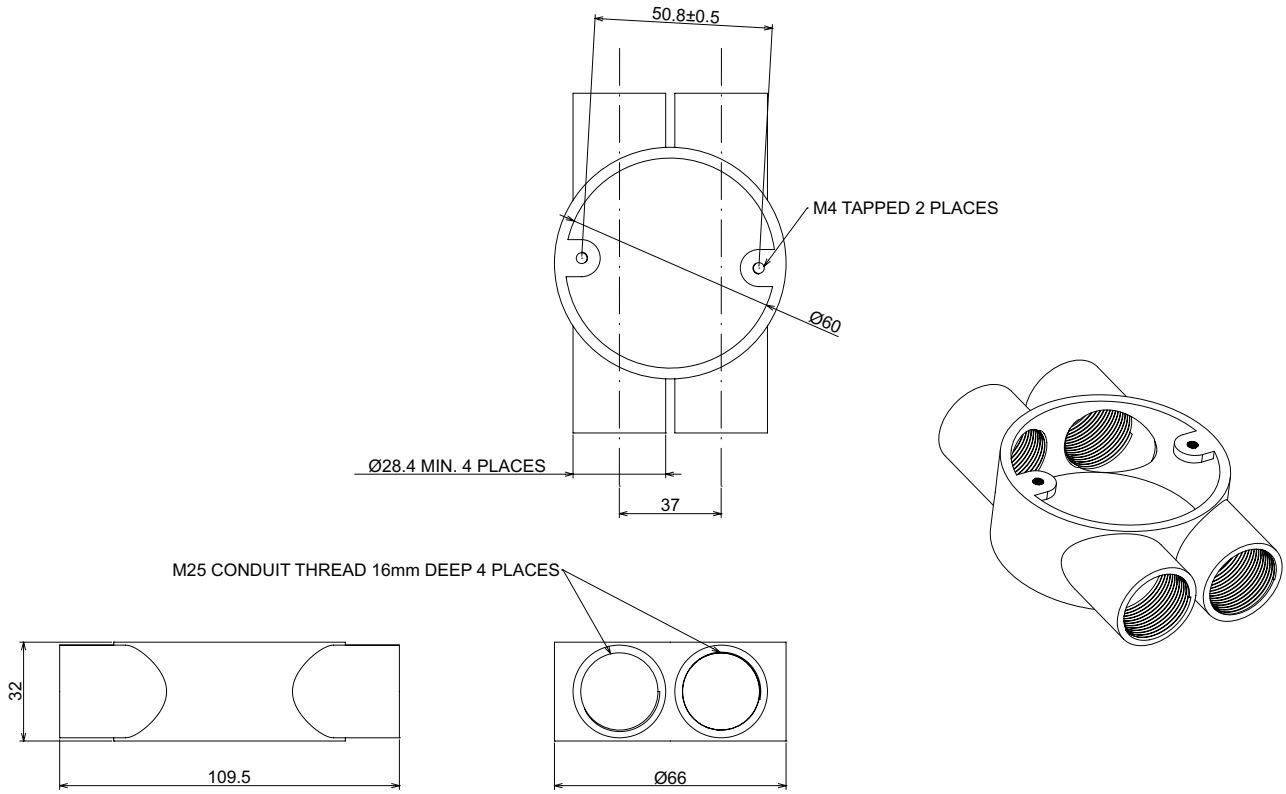

Values are nominal and with a general tolerance ±5% unless otherwise specified

© Metpro Ltd 2018 - This document is provided for information purposes only and is subject to change without notice. Metpro Ltd makes no warranty, express or implied, with this document or the information contained within.